Pump Your Needs.

WELCO

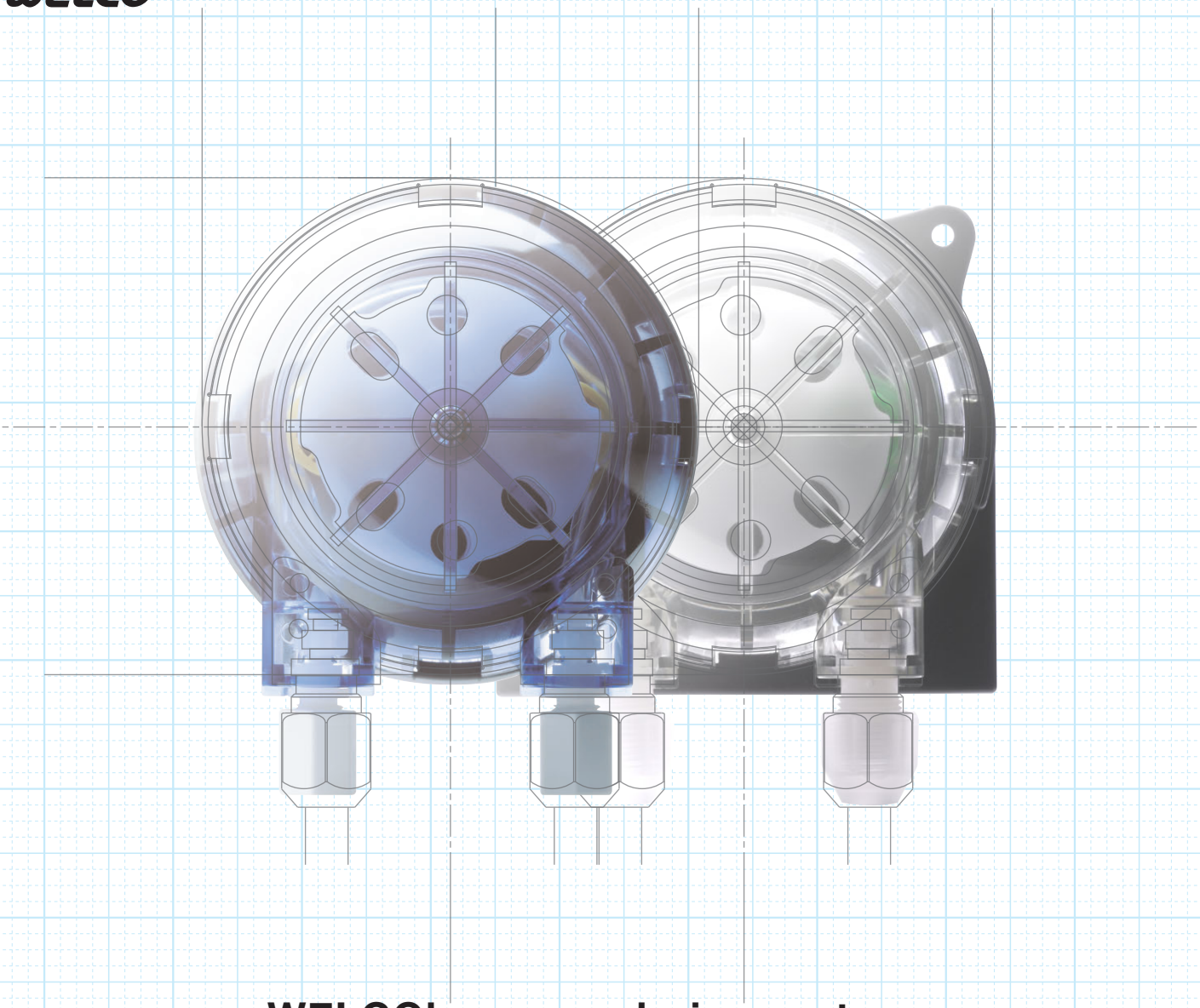

WELCO's easy ordering system
can match the best product to the customer's needs

WP1000 / WP1100
PERISTALTIC PUMP
SELECTION GUIDE

A specification of WELCO Peristaltic pumps can be determined by many combination of parts.

Please select each parts according to your requirement.

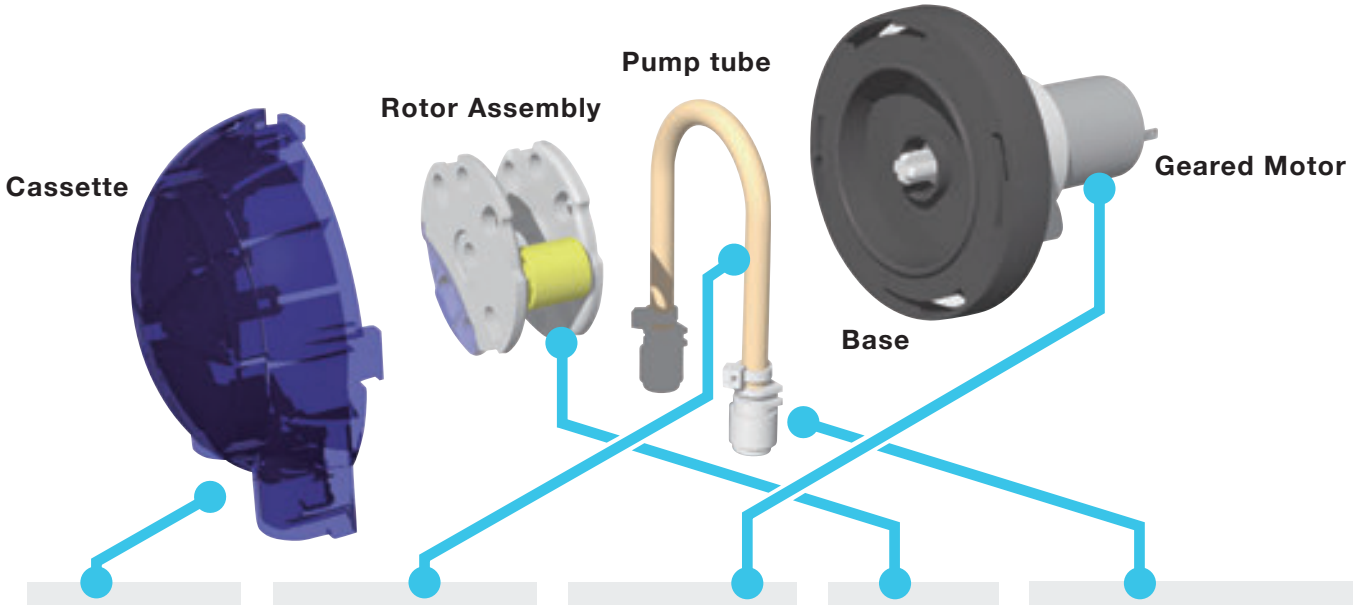

Series name

WP10
(WP1000)

WP11
(WP1100)

*Available tube size: 3/16"or 1/4" only

Pump tube type

PHARMED BPT	P
TYGON A-60-G (Norprene A-60-G)	N
TYGON A-60-F (Norprene A-60-F)	NF
TYGON 3355/3350	S
Versilon F-5500-A (Fluran F-5500-A)	F
Versilon 2001 (TYGON 2001)	U
TYGONS3 E-LFL (TYGON E-LFL)	EL
TYGOPRENE XL-60	XL
W TUBE	W

Geared motor type

S/M/L/DS/DM
12/24VDC Brush motor

IG/ID/IF/ JG/JD/JF
Low noise & Long life DC Brush motor

PM/PD/PL
Brushless motor

FB/BA/GA/GD
Stepper motor

Number of rollers

2: 2rollers

4: 4rollers

Tube fitting type

W4

WM3

WM4

J8

J4

WI6

WT6

H

(No Fitting)

Example			Tube Size					Option	
WP10	—	P	1/8	DS	2	—	W4	— C	P
❶		❷	❸	❹	❺		❻	❼	❽

❷ Pump tube type: Material (Selectable according to fluid type)

WP10 – P 1/8 ☐☐ – ☐ – ☐☐

Tube type	Product Description	Regulately compliance/meets
PHARMED BPT P	*Great resistant to general chemicals, acid, alkali and oxidizing agents *Compatible with virtually all commercial cleaners and sanitizers *Lasts up to 30 times longer than silicone tubes.	USP Class VI
TYGON A-60-G (Norprene A-60-G) N	*Lasts and perform better than EPDM and other speciality rubber tubes *Ozone and UV Light resistant *Applicable to soap and disinfectant dispensing, printing ink transfer, and etc…	-
TYGON A-60-F (Norprene A-60-F) NF	*Food process tube for critical processing applications in the food, dairy and cosmetic industries. *Compatible with virtually all commercial cleaners and sanitizers *Great resistant to general chemicals, acid, alkali and oxidizing agents	FDA 21 CFR Part 177.2600 NSF 51 3-A
TYGON 3355/3350 S	*High-performance and platinum-cured silicone tube *Ultra-smooth inner bore reduces potential for particle entrapment *Excellent fluid flow characteristics.	FDA 21 CFR Part 177.2600 USP Class VI 3-A (3350 only)
Versilon F-5500-A (Fluran F-5500-A) F	*A proprietary fluorelastomer tube *Exellent resistance to corrosive chemicals, oils, fuels and solvents *Ozone and UV Light resistant	-
Versilon 2001 (TYGON 2001) U	*Plasticizer-free chemical resistant tube. *Great resistant to a wide range of fluids that typically destroy PVC products *Applicable to soap and detergent dispensing, ink transfer, water purification lines, food, beverage and chemical transfer	FDA 21 CFR Part 177.2600
TYGONS3 E-LFL (TYGON E-LFL) EL	*Non-DEGO tube for laboratory, Food & Beverage and Biopharmaceutical Applications *Longest flex life in any clear Tygon tubes *Extremely low particle spallation for sensitive fluid applications	FDA 21 CFR Part 177.2600 USP Class VI NSF-51
TYGOPRENE XL-60 XL	*Alternative to silicones and PVC when longer pump tube life is required *Excellent resistance to a wide range of fluids, including acids and bases *Greatly reduce the risk of fluid contamination	FDA 21 CFR Part 177.2600 NSF 51
W TUBE W	*Dual-wall tube which has excellent resistant to chemicals, acid, alkali. *Inner layer: Polyolefin Outer layer: Thermoplastic Elastomers	-

Note: TYGON, Pharmed, Norprene, Fluran and Tygoprene, Versilon are manufactured by Saint-Gobain Group.
Note: When selecting tubes with a 3/16” inner diameter, as long as there are no specification or shape-related issues, use of the WP1100 is recommended.

❸ Pump tube type: Tube size (Selectable according to the tube material and number of rollers)

WP1000

Model name (inner diameter)	1/16	3/32	1/8	4
Inner diameter	1.6mm (1/16”)	2.4mm (3/32”)	3.2mm (1/8”)	4mm (-)
Available tube material	P / NF	S / P / NF	All type (of)	P / NF / W
Number of rollers	2 / 4	2 / 4	2 / 4	2 / 4

WP1100

Model name (inner diameter)	3/16	1/4
Inner diameter	4.8mm (3/16”)	6.4mm(1/4”)
Available tube material	ALL type except for XL	ALL type except for EL,XL
Number of rollers	2 / 4	2

Caution: Tube type F3/16”, EL1/8", EL3/16” and U3/16” cannot be used with four rollers due to its characteristic.

Flow amount benchmark (flow amount per rotation)

Inside diameter of tube (inches)	1.6mm (1/16”)		2.4mm (3/32”)		3.2mm (1/8”)		4mm		4.8mm (3/16”)		6.4mm(1/4”)	
Number of rollers	2	4	2	4	2	4	2	4	2	4	2	-
WP1000 Flow amount (mL)	-	0.2	0.5	0.45	0.9	0.8	1.45	1.2	1.95	1.6	3.0	-

Caution: The above table describes the initial benchmark flow amounts during water suction. This may vary considerably depending on the tube type, use period, ambient temperature, and lot tolerances, etc. Measure the specifications with reasonable leeway.

❹ Geared motor types

WP10 – P 1/8 DS ☐ – ☐ – ☐☐

DC Brush Motor & Gear

24VDC Brush Motor & Gear: Three types are selectable (low, medium and high speeds)

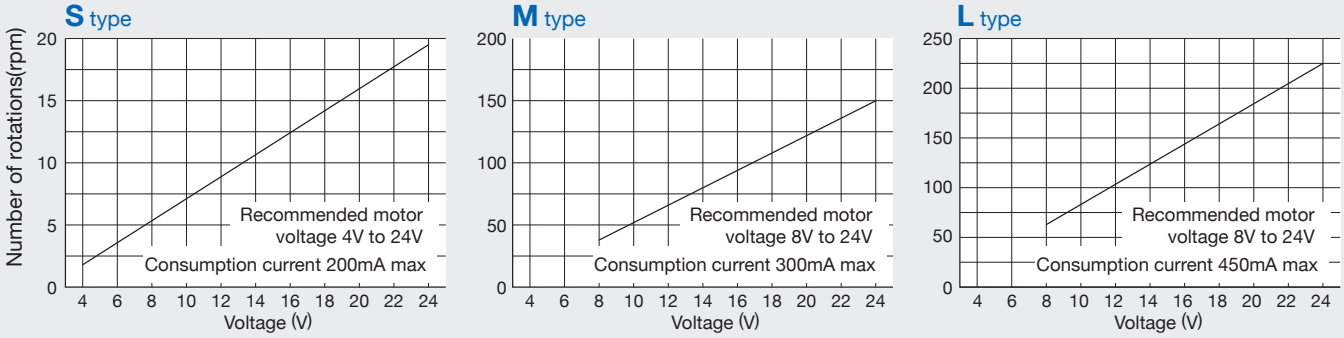

12VDC Brush Motor & Gear: Two types are selectable (low and medium speeds)

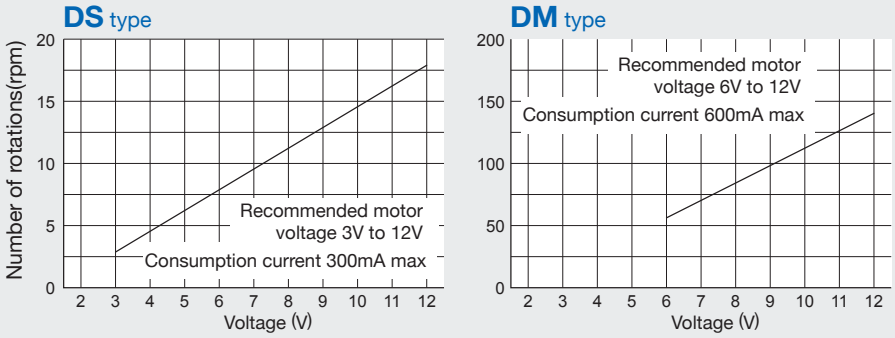

Motor wiring and terminal dimensions diagrams

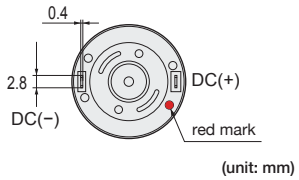

1. The consumption current described above is the value during normal operations. An approximately threefold inrush current occurs during rotation start up.
2. The RPM described above is the benchmark value when 100mNm load is applied to each motors. This may vary depending on tube type and operating conditions. Design an application with enough margin upon an evaluation under actual conditions.
3. Short circuit between terminals may occur due to end of motor life or short circuit between commutator slits by specific operating environment and condition. In order to prevent circuit burnout, please take protective measures such as using fuses.

Dimensions (unit: mm)

■WP1000

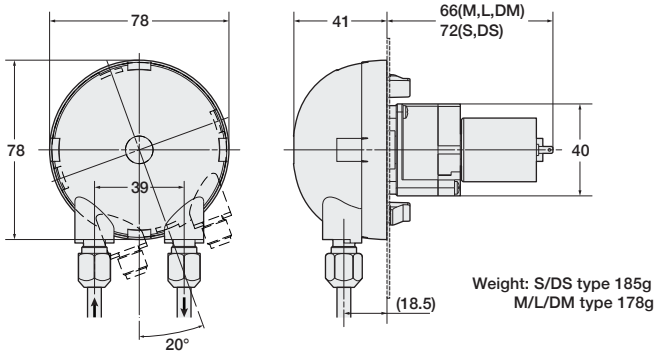

■WP1100

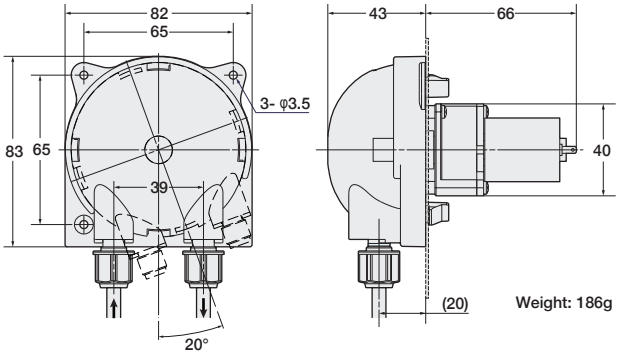

■WP1000
Cutting hole dimensions

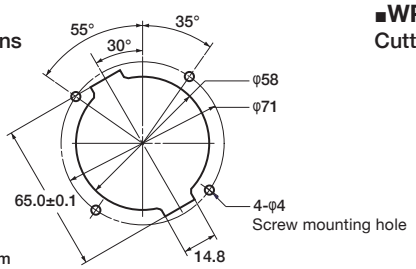

Panel thickness: 1.0 to 1.2mm

■WP1100
Cutting hole dimensions

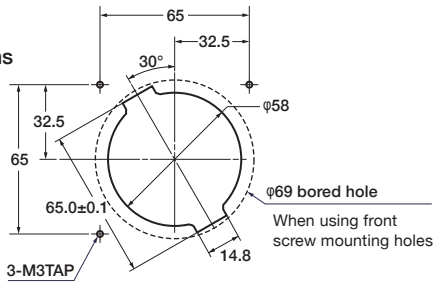

WP10 – P 1/8 IG ☐ – ☐ – ☐☐

High Performance DC Brush Motor & Gear

24VDC Brush Motor & Gear: Three types are selectable (low, medium and high speeds)

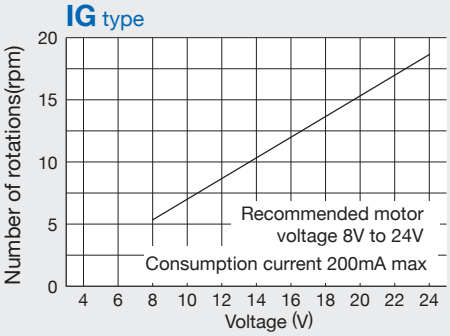

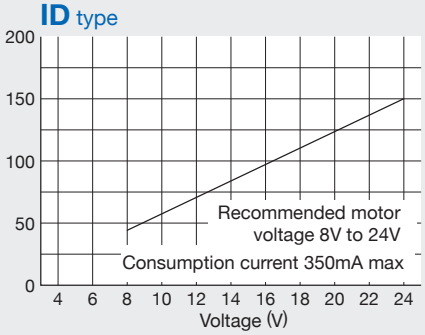

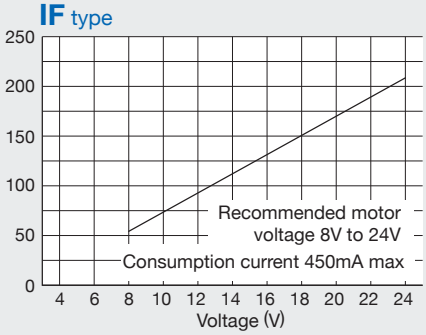

12VDC Brush Motor & Gear: Three types are selectable (low and medium speeds)

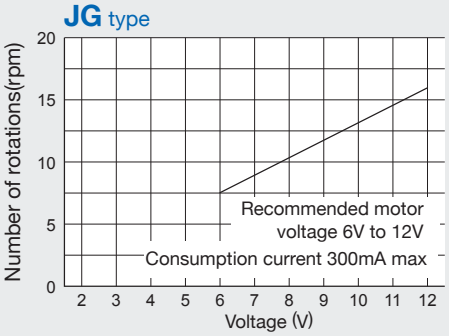

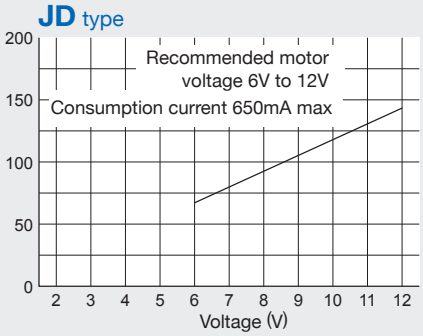

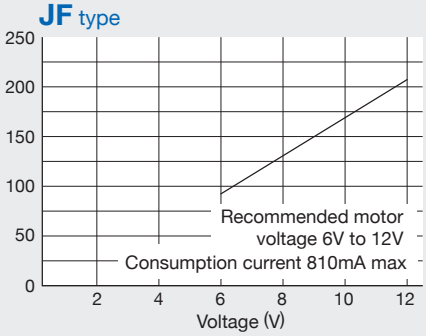

1. The consumption current described above is the value during normal operations. An approximately threefold inrush current occurs during rotation start up.
2. The RPM described above is the benchmark value when 100mNm load is applied to each motors. This may vary depending on tube type and operating conditions. Design an application with enough margin upon an evaluation under actual conditions.
3. Short circuit between terminals may occur due to end of motor life or short circuit between commutator slits by specific operating environment and condition. In order to prevent circuit burnout, please take protective measures such as using fuses.

Dimensions (unit: mm)

■WP1000

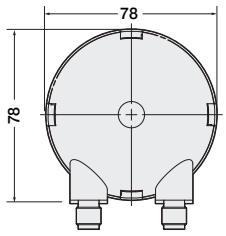

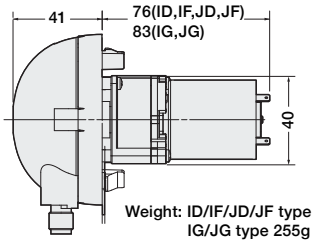

Weight: ID/IF/JD/JF type 250g
IG/JG type 255g

■WP1100

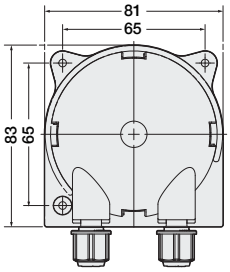

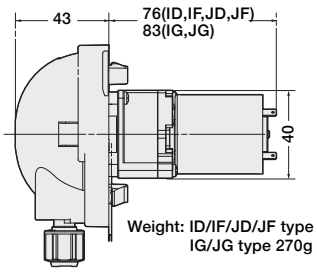

Weight: ID/IF/JD/JF type 265g
IG/JG type 270g

Motor wiring and terminal dimensions diagrams

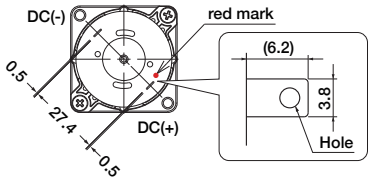

Cutting hole dimensions

■WP1000

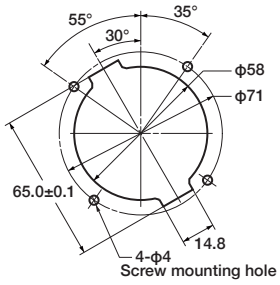

Panel thickness: 1.0 to 1.2mm

■WP1100

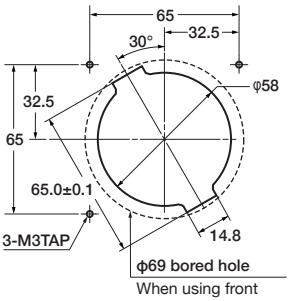

When using front screw mounting holes

WP10 – P 1/8 PM 2 – ☐ – ☐☐

DC Brushless Motor & Gear

Three types are selectable (medium and high speeds)

Geared motor Specification

Geared motor model	PM type	PD type	PL type (WP1100 only)
Configuration	Brushless motor & 1:64 Gear head	Brushless motor & 1:42 Gear head	Brushless motor & 1:8 Gear head
Operation Voltage *1	DC16V to DC24V	DC16V to DC24V	DC16V
Current *2	Less than 300mA	Less than 400mA	Less than 700mA
Motor Speed (rpm)	Approx. 50 to 70rpm at DC16 to 24V (100mNm Load)	Approx. 75 to 110rpm at DC16 to 24V (100mNm Load)	Approx. 348rpm at DC16V *3 (100mNm Load)
Direction of Rotation	CW		
Motor Rated Temperature	less than 70°C		
	IC is integrated into the motor as thermal protection. The motor power shuts down automatically when the IC reaches a predefined temperature. There is no gurantee for recovery once it shuts down.		
Motor lock protection	2sec TYP		
	If the motor locks up, the motor power will be shut down within 15 seconds		
Life	5,000hr (Geared motor) *Not a guaranteed value.		

*1.The lowest operation voltage may vary depending on the tube type, tube size, ambient temperature, etc. Please contact your sales representative to get help when you operate by lower voltage.
*2.Caution: The consumption current described above is the value during normal operations. An approximately threefold inrush current occurs during rotation startup.
*3.The flow rate of the PL (6.4mm) type is lower than the value calculated by the flow rate per rotation number of rotations, and is approximately 700mL per minute.

■ Motor Wiring Information

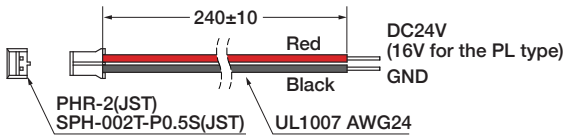

Circuit protection
There is no circuit protection against overvoltage and wrong connection. Do not apply surge voltages that eceed the rated voltage and not to connect to the incorrect polarity.

Dimensions (unit: mm)

■ WP10 - ☐☐PM
■ WP10 - ☐☐PD

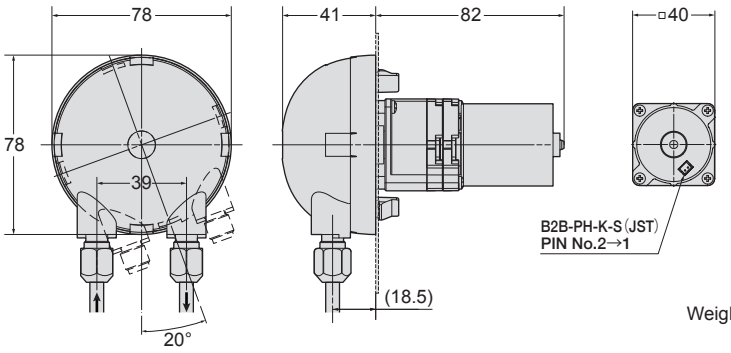

Weight: 315g

■ WP11 - ☐☐PM
■ WP11 - ☐☐PD

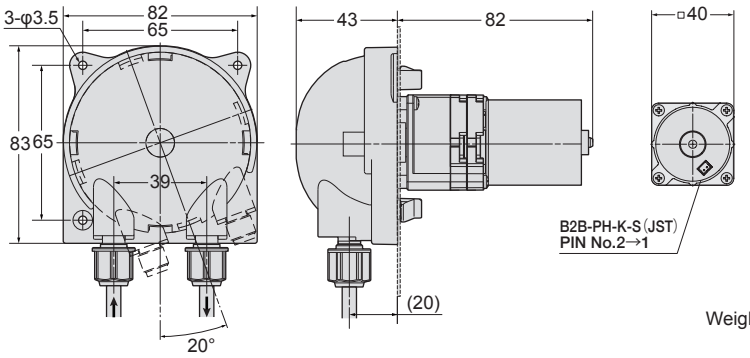

Weight: 330g

WP10 – P 1/8 PM 2 – ☐ – ☐☐

DC Brushless Motor & Gear

Three types are selectable (medium and high speeds)

Dimensions (unit: mm)

■ WP11 - ☐☐PL

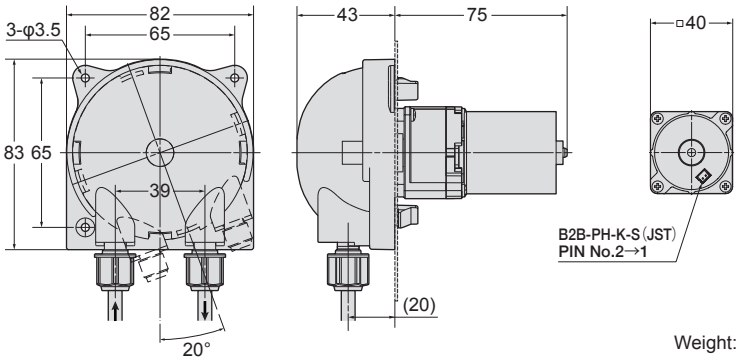

Weight: 315g

Cutting hole dimensions

■ WP1000

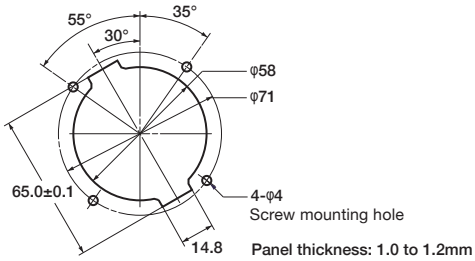

■ WP1100

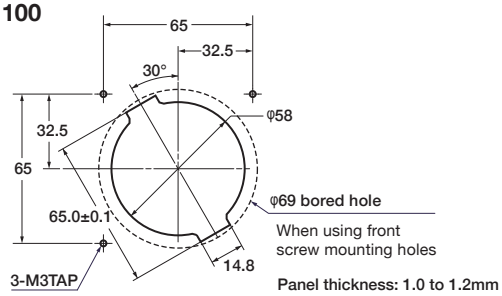

WP10 – P 1/8 FB □ – □ – □□

Stepper Motor & Gear

Four types of stepper motors can be selected according to the application and the product series

Geared motor Specification

Geared motor model	FB type	BA type	GA type	GD type
Configuration	Hybrid stepper motor & 1: 64 Gear ratio	Hybrid stepper motor & 1: 8 Gear ratio	Hybrid stepper motor & 1:8 Gear ratio	Hybrid stepper motor & 1:42 Gear ratio
Number of phases and motor type	2 phase / BI polar system		2 phase / UNI polar system	
Rated Voltage	1.92V	1.76V	3.5V	
Rated Current	0.8A / Phase	1.1A / Phase	1.2A / Phase	
Step Angle	0.0141° (Half step)	0.1125° (Half step)	0.1125° (Half step)	0.0216° (Half step)
Motor Speed (rpm)	0 to 20rpm	20 to 150rpm	20 to 150rpm	0 to 29rpm
Duty Ratio	Max. 50%			
Winding Resistance	2.4Ω±10%	1.6Ω±10%	2.9Ω±10%	
Inductance	2.5mH	2.6mH	4.0mH	
Motor Insulation Class	B			
Motor Rated Temperature	less than 80°C			
Life	5,000hr (Geared motor) *Not a guaranteed value.			

Dimensions (unit: mm)

■WP10 - □□BA

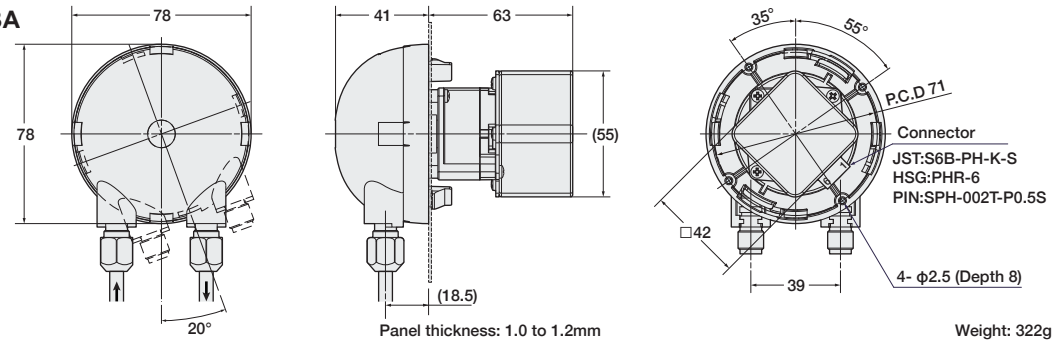

Panel thickness: 1.0 to 1.2mm

Weight: 322g

■WP10 - □□FB

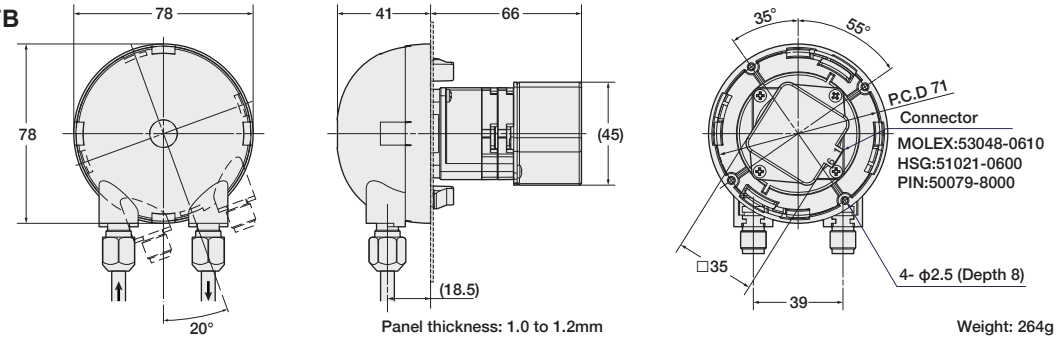

Panel thickness: 1.0 to 1.2mm

Weight: 264g

■WP10 - □□GA

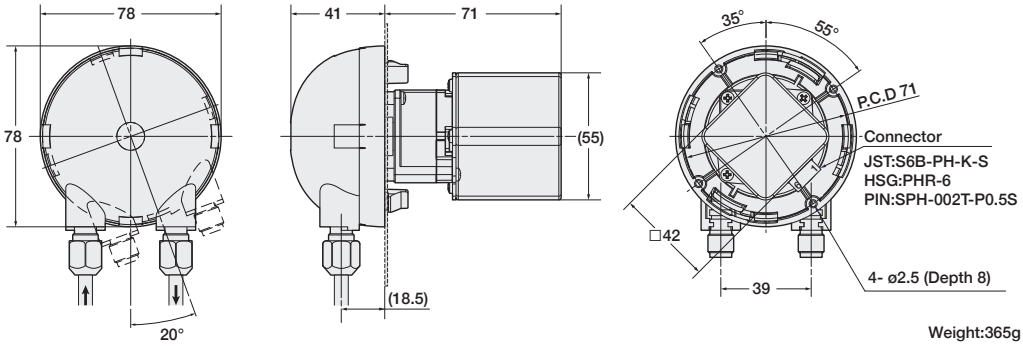

Weight:365g

WP10 – P 1/8 FB □ – □ – □□

Stepper Motor & Gear

Four types of stepper motors can be selected according to the application and the product series

Dimensions (unit: mm)

■WP10 - □□GD

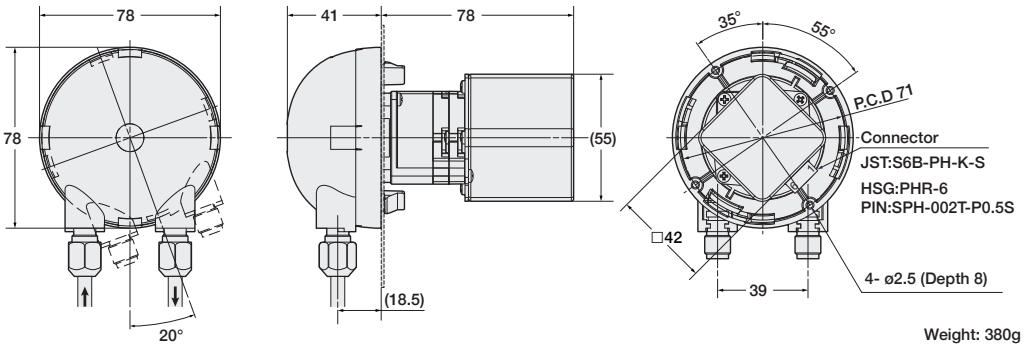

Weight: 380g

■BI POLAR Winding Diagram

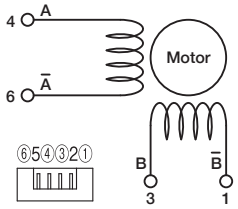

■UNI POLAR Winding Diagram

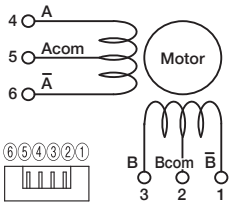

❻ Tube fitting type: Varied lineup that is selectable according to requirements

WP10 – P 1/8 DS 2 – W4 – ☐☐

W4

- Connectable hose sizes (OD)
  1/4”(6.4mm) or 6mm
- Available pump tube sizes & pump series
  WP1000: 1/8”(3.2mm), 4mm,
  WP1100: 3/16”(4.8mm), 1/4”(6.4mm)

Fitting consists of compression nut, sleeve and insert. Supports various hose hardnesses.

WM3

- Connectable hose sizes (OD)
  3mm
- Available pump tube sizes & pump series
  WP1000: 1/16”(1.6mm), 3/32”(2.4mm), 1/8”(3.2mm)
  WP1100: N/A

Fitting consists of compression nut and sleeve. Supports various hose hardnesses
Nut and sleeve will vary according to hose size.

WM4

- Connectable hose sizes (OD)
  4mm
- Available pump tube sizes & pump series
  WP1000: 1/16”(1.6mm), 3/32”(2.4mm), 1/8”(3.2mm)
  WP1100: N/A

Fitting consists of compression nut and sleeve. Supports various hose hardnesses
Nut and sleeve will vary according to hose size.

J8

- Connectable hose sizes (OD)
  1/8”(3.2mm) (Nylon or Polyethylene)
- Available pump tube sizes & pump series
  WP1000: 3/32”(2.4mm), 1/8”(3.2mm)
  WP1100: N/A

Nut and sleeve are integrated. Excellent workability.
Suitable for polyethylene, nylon and other plastic hoses.

J4

- Connectable hose sizes (OD)
  1/4”(6.4mm) (Nylon or Polyethylene)
- Available pump tube sizes & pump series
  WP1000: 1/8”(3.2mm), 4mm,
  WP1100: 3/16”(4.8mm), 1/4”(6.4mm)

Nut and sleeve are integrated. Excellent workability.
Suitable for polyethylene, nylon and other plastic hoses.

WI6

- Connectable hose sizes (OD)
  6mm (Nylon or Polyethylene)
- Available pump tube sizes & pump series
  WP1000: 1/8”(3.2mm), 4mm,
  WP1100: 3/16”(4.8mm), 1/4”(6.4mm)

Nut and sleeve are integrated. Excellent workability.
Suitable for polyethylene, nylon and other plastic hoses.

WT6

- Connectable hose sizes
  6mm (Note: ID size)
- Available pump tube sizes & pump series
  WP1000: 1/8”(3.2mm), 4mm,
  WP1100: 3/16”(4.8mm), 1/4”(6.4mm)

Barbed type. Inserted directly into hose and used.

H (No Fitting)

- Connectable hose sizes (OD)
  N/A
- Available pump tube sizes & pump series
  WP1000: 1/8”(3.2mm), 4mm,
  WP1100: 3/16”(4.8mm), 1/4”(6.4mm)

No fitting. For the case in which a customer connects their own original fitting, or when using a special length pump tube.
Note: If the pump tube has a large diameter, the flow rate tolerance should be increased.

❼ Color variation

A 5-color lineup that can be classified for use according to the type of liquids used

WP10 – P 1/8 DS 2 – W4 – B

B: Blue

G: Green

C: Clear

R: Red

Y: Yellow

UV: Black
(Special order item
Only for WP1000)

❽ Using an optional panel

There is also a lineup of panels to which the pump can be easily mounted

WP1000 – P 1/8 DS 2 – W4 – B P

P = with bracket
N or **Blank** = without bracket

■ **Option bracket dimensions (unit: mm)**

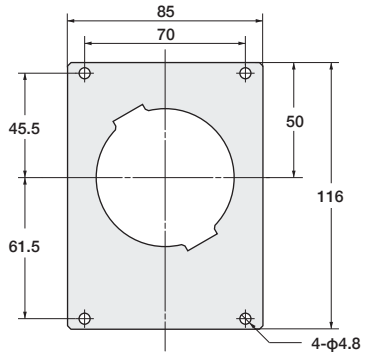

Thickness: 1.2mm
Material properties: SUS304

General specifications

Recommended installation height	2.0m max
Liquid temperature range	5 to 50°C (41°F to 122°F)
Specified environment temperature range	0 to 50°C (32°F to 122°F)
Specified ambient humidity range	20% to 80% (with no condensation)
Certifications&Approvals	E209254 CE UKCA RoHS NSF COMPONENT

⚠ Precautions

1. When selecting a tube, the customer should perform a verification test to verify the chemical suitability according to the usage environment and the intended application.
2. Regardless of the pump tube type, the phenomenon of peeling from inside of the tube starts with small amounts.
3. This product was not designed for medical use. Do not use for medical applications.
4. This product is not waterproof. If using in water-filled environments, design to protect against water.
5. Numerical data listed in this catalog reflect conditions measured over short periods of time. Their accuracy for long-term use is not assured.
6. There is a tendency for the flow rate to increase until the tube becomes acclimated, and even among the same model, different lots may have different flow rates within the specified tolerances. Also, the rotating speed of the DC motor may fluctuate depending on the load conditions and changes in the motor temperature. During the design stage, be sure to select a motor with ample capacity.

WELCO Co., Ltd.
3-3-1 Sumiyoshi-cho, Fuchu-shi, Tokyo 183-0034, Japan Tel: +81-(0)42-333-7320 Fax: +81-(0)42-333-7337
Please see the web site to get more detailed information. **http://www.welco.net**

welco SEARCH

230316